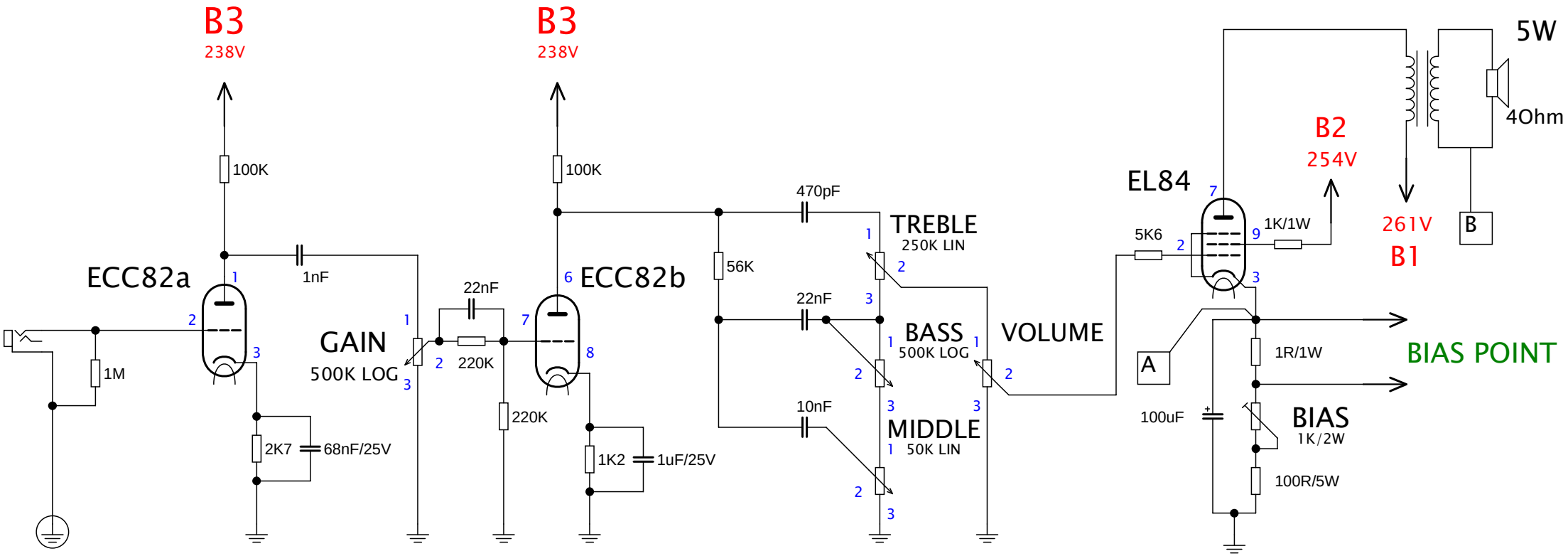
B3
238V
B3
238V
100K
100K
ECC82a
1nF
1M
2K7
68nF/25V
GAIN
500K LOG
22nF
220K
220K
ECC82b
1K2
1uF/25V
470pF
56K
22nF
10nF
TREBLE
250K LIN
BASS
500K LOG
MIDDLE
50K LIN
VOLUME
EL84
5K6
1K/1W
B2
254V
261V
B1
5W
4Ohm
B
A
1R/1W
100uF
BIAS
1K/2W
100R/5W
BIAS POINT

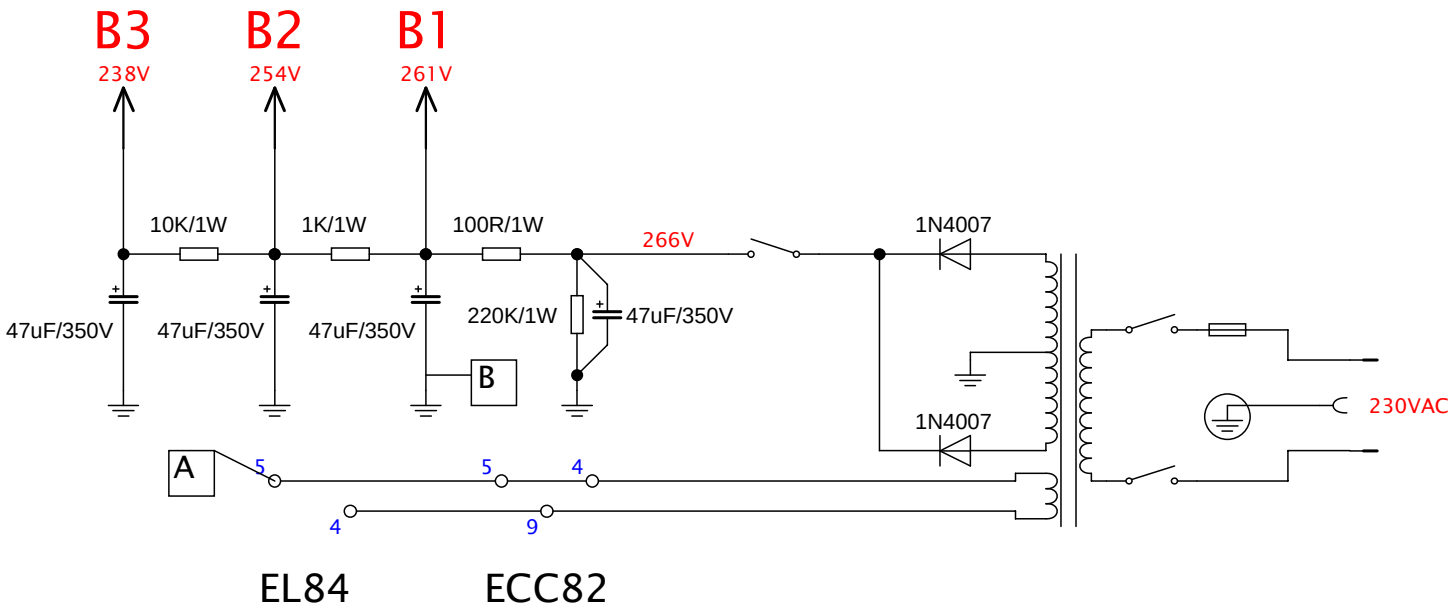
B3
238V
B2
254V
B1
261V
10K/1W
1K/1W
100R/1W
266V
1N4007
47uF/350V
47uF/350V
47uF/350V
220K/1W
47uF/350V
B
1N4007
230VAC
A
EL84
ECC82