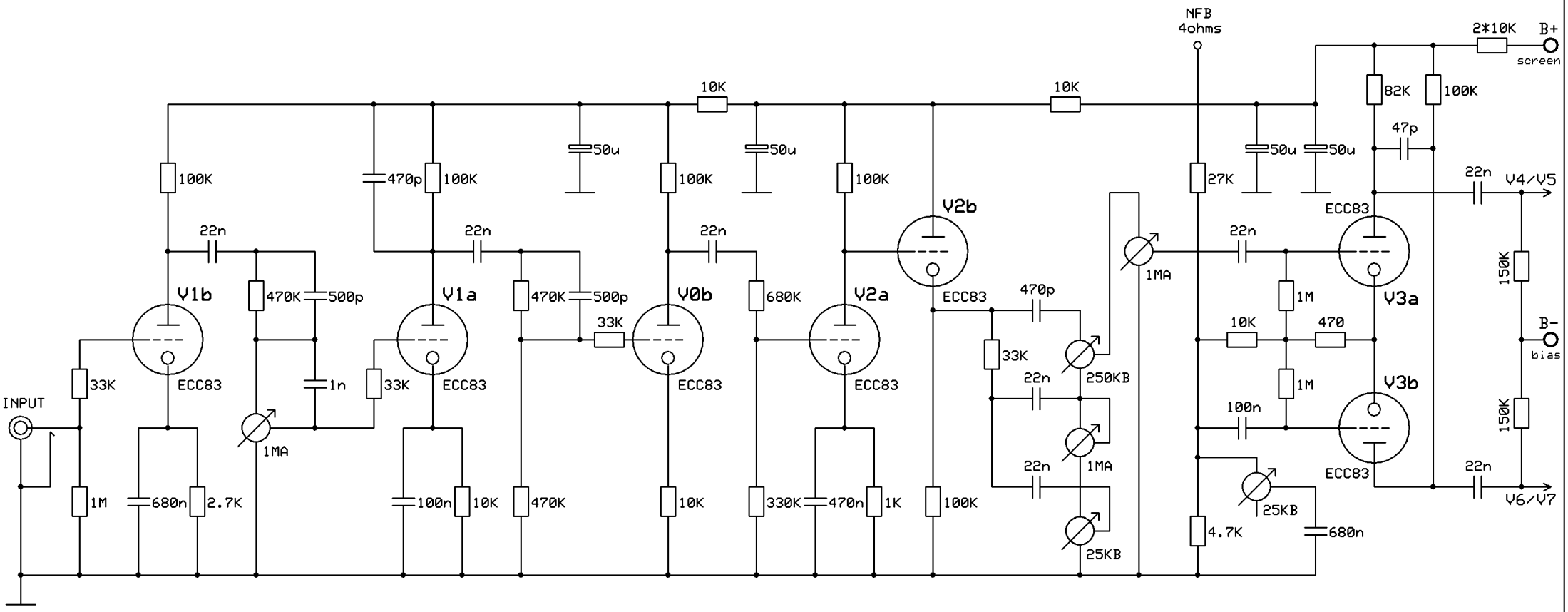

FRANK LEVI		
S.I.R. #36 mod ryu-specs v7		
novosibir	Rev 1.0 01.01.2011	Page 1/1